3P Leaf Catcher

Art.-Nr. 2000310 brown
Art.-Nr. 2000320 grey

Description:

The 3P Leaf Catcher is simply installed in the downpipe. It filters out leaves and moss, and collects it in a small basket. Install it at a convenient height for leaf removal from time to time.

Fits downpipes at DN 80 - DN 100.
Installation in standpipes with Ø80 or 110 mm
Adapters available.
Complete with reduction sets.

For roof areas up to 70 m².

Easy maintenance, empty basket from time to time.

How it works:

1. Coarse dirt is filtered out through the sieve area.
2. Leaves and larger particles are retained in the basket.
3. Cleaned rainwater continues to flow through the downpipe.

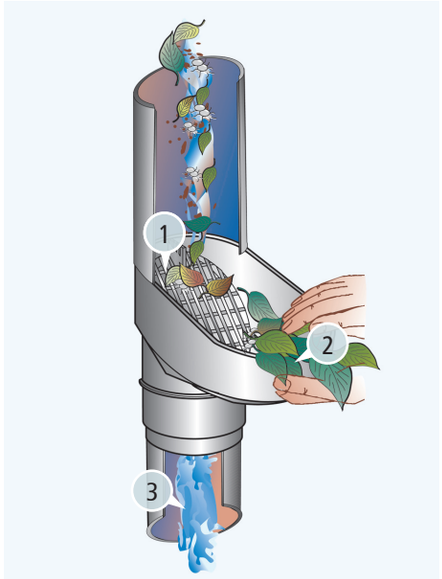

Technical Data:

Installation in standpipes with DN 80 and DN 110, or downpipes with DN 80 and DN 100.

Measures: 220 x 118 x 135 mm

Material: Polyethylen

Weight: 0,42 kg

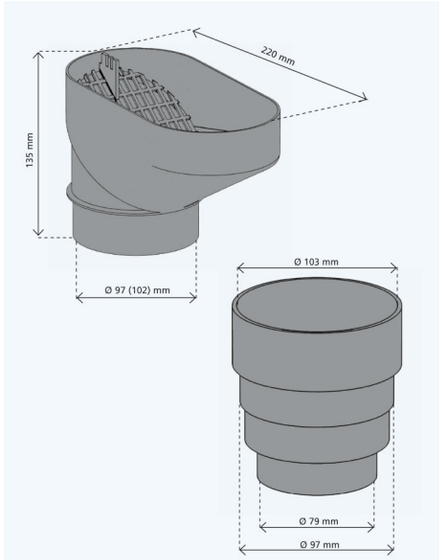

Example 1:

3P Leaf Catcher grey installed in a standpipe with reduction, above the zinc downpipe.

Example 2:

3P Leaf Catcher brown installed in a standpipe with reduction, above the copper downpipe.

Text for invitation of tenders:

Pos.	Quantity	Article	Price in €
1.1	_____	3P Leaf Catcher Rainwater filter for the installation in downpipes DN 80/DN 100 and standpipes DN 80/DN 110. Application area: as pre-filter for rainwater equipments or infiltration systems, for roof areas with many leaves. The larger dirt is filtered out, cleaned rainwater passes through the downpipe.	_____

Observations:

Packing:
in 8 languages and 4 colors

Packing unit:

Covering box: 790x575x700mm: 54 pieces
Pallet: 324 pieces

EAN:

4018712000047 grey 2000320
4018712000023 brown 2000310