3P Downpipe Filter

Art.-Nr. 2000510 Copper
Art.-Nr. 2000520 Titanzinc

3P Technik

Description:

Filters and collects rainwater for water butts and smaller rain tanks.

For roof areas up to 150 m².
Available in copper or titanzinc.
Suitable for downpipes DN 110.

Can be reduced to DN 80 and DN 87 with a special reduction set, if necessary.

High efficiency.

Low maintenance.

With overflow function.

How it works:

1. Rainwater is led through the downpipe onto the inner side
2. of the filter cartridge and is accumulated through a union.
3. The water is led from the interior to the exterior and is being filtered/cleaned.
4. Cleaned water is led through the cartridge outlet channel to the storage.
5. Dirt is led into the sewer system.

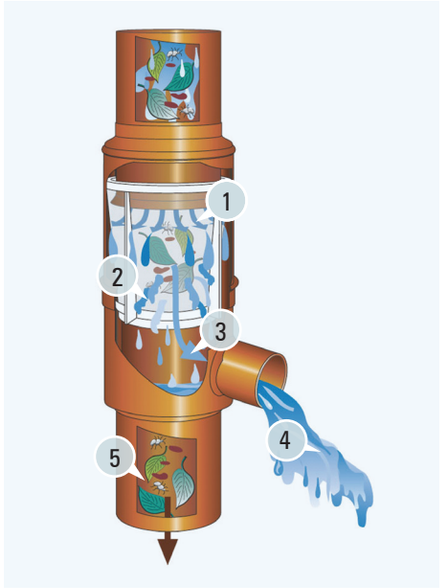

Technical Data:

Rainwater filter for installation in metal downpipes.

Housing material: Copper or titanzinc

Filter sieve: Stainless steel

Mesh size: 0,315 mm

Material Filtercorpus: Polyethylen

Weight: 1,26 kg

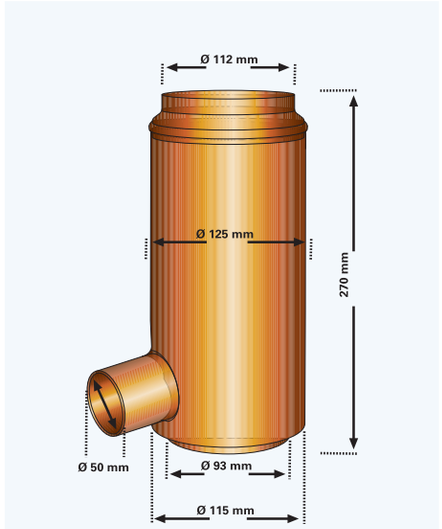

Example 1:

3P Downpipe Filter installed in a downpipe made of zinc. The cleaned water is led through a 50 HT-pipe in a concrete tank.

Text for invitation of tenders:

Pos.	Quantity	Article	Price in €
1.1	_____	3P Downpipe Filter in copper/titanzinc Rainwater Filter for installation in downpipes DN100, outlet DN50 Filter sieve made of stainless steel, mesh size 0,315 mm. For filling water butts and smaller rain tanks. Dirt is led to the sewer, cleaned water is led through the cartridge´s outlet channel to storage.	_____
1.2	_____	3P Reduction for Downpipe Filter in copper or titanzinc for 80 or 87 downpipes.	_____

Accessories 1:

For installation of the 3P Downpipe Filter, copper, in 80 downpipes.
Art.-Nr. 2000515 Copper DN 80
87 downpipe:
Art.-Nr 2000516 Copper DN 87

Accessories 2:

For installation of the 3P Downpipe Filter, titanzinc, in 80 downpipes.
Art.-Nr. 2000525 Titanzinc DN 80
87 downpipe:
Art.-Nr. 2000526 Titanzinc DN 87

Observations:

Packing unit:
Pallet: 160 pieces

EAN:

4018712000887 titanzinc 2000520
4018712000870 copper 2000510