3P Leaf Separator with filling function

Art.-Nr. 2000910
Art.-Nr. 2000920

3P Technik

Description:

The 3P Leaf Separator with filling function is a combination of a leaf separator and rainwater tank filling function.

It can also be used as a pre-filter for leaves and larger dirt particles, but at the same time it can also serve for filling a rainwater butt. The larger dirt is filtered out of the rainwater through the front opening. Therefore, this filter serves also as a protection against the blocking of the sewage pipe.

You can add a hose for filling rainwater tanks to the small integrated 3/4" outlet connection.

Connection possibility for 80 and 100 downpipes, reduction is integrated in the housing.

How it works:

1. The larger dirt is filtered out of the rainwater by the filter ribs.
2. Leaves and dirt are simply ejected from the filter.
3. Cleaned rainwater passes through to the downpipe or
4. into a rainwater tank through a 3/4" outlet connection.

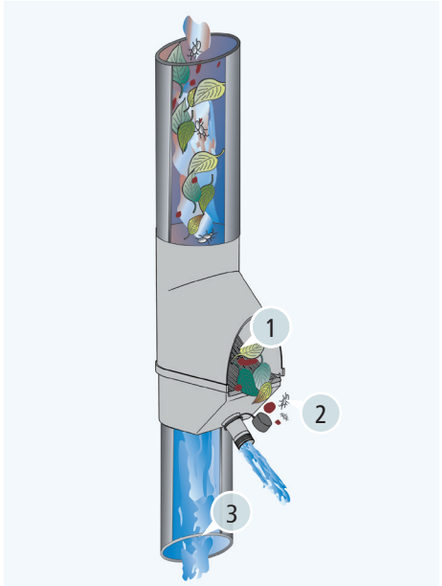

Technical Data:

Available in grey an brown.

Material: Polyethylen

Connection Ø 80 und 100 mm for pipes made of sheet metal.

Guiding plate can be removed.

Distance of filter ribs: aprox. 5mm

Connection with rainwater tank through a 3/4" AG or the hose can be fitted directly.

Weight: 0,4 kg

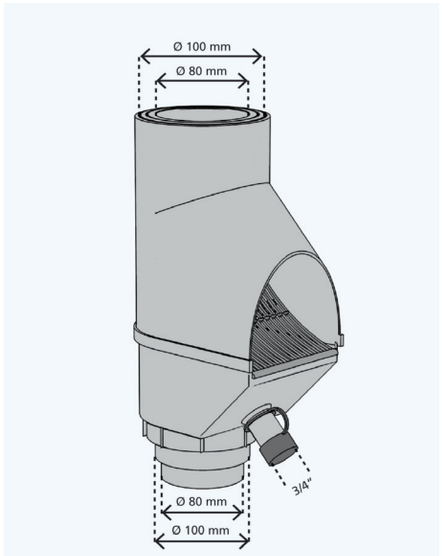

Example 1:

3P Leaf Separator grey with filling function installed in a downpipe. Here the filter is installed directly in the standpipe and waits for the connection to a rainwater tank.

Text for invitation of tenders:

Pos.	Quantity	Article	Price in €
1.1	_____	3P Leaf Separator with filling function Rainwater filter for installation in downpipe DN 80/DN 100 and standpipe DN 80/DN 110 Application area: as pre-filter for rainwater equipments or infiltration systems, and as rainwater tank filling automat with 3/4" connection. The larger dirt is filtered out, cleaned rainwater passes through the downpipe.	_____

Accessories 1:

3P Connection Set Raincollector
3/4" x 25mm, 25 cm hose with
tank wall seal connector.
Including hand drill.
Art.-Nr. 9000125

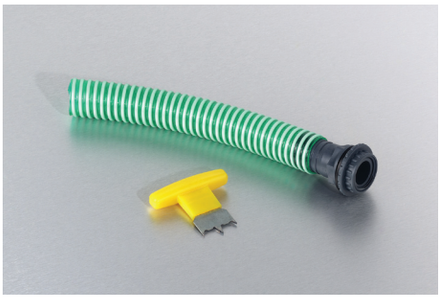

Observations:

Packing:
in 8 languages and 4 colors

Packing unit:

Covering box: 790x575x700mm: 34 pieces
Pallet: 204 pieces

EAN:

4018712001020 grey 2000920
4018712001013 brown 2000910